J. C. DOTY.

FLYING MACHINE.

APPLICATION FILED MAY 22, 1911.

1,023,927.

Patented Apr. 23, 1912.

2 SHEETS—SHEET 1.

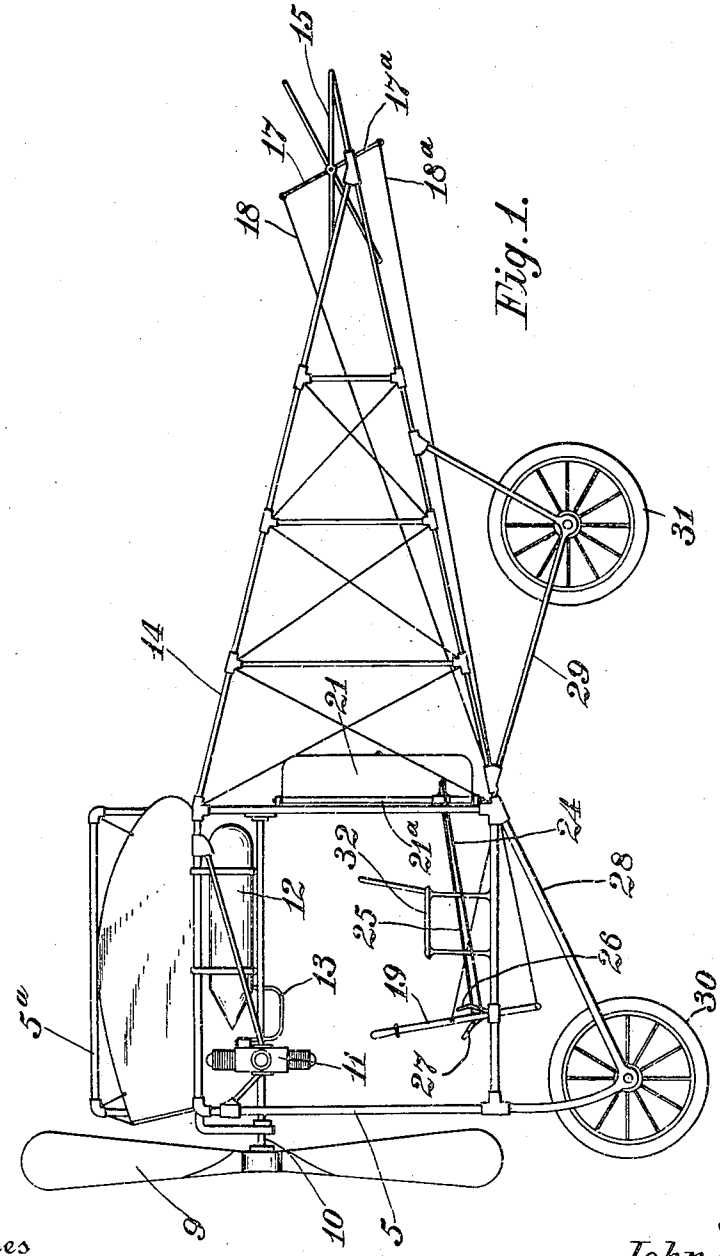

Fig. 1.

Witnesses
Benjamin Finckel
Mayme Foard

Inventor
John C. Doty
by Finckel & Finckel
his Attorneys

J. C. DOTY.

FLYING MACHINE.

APPLICATION FILED MAY 22, 1911.

1,023,927.

Patented Apr. 23, 1912.

2 SHEETS—SHEET 2.

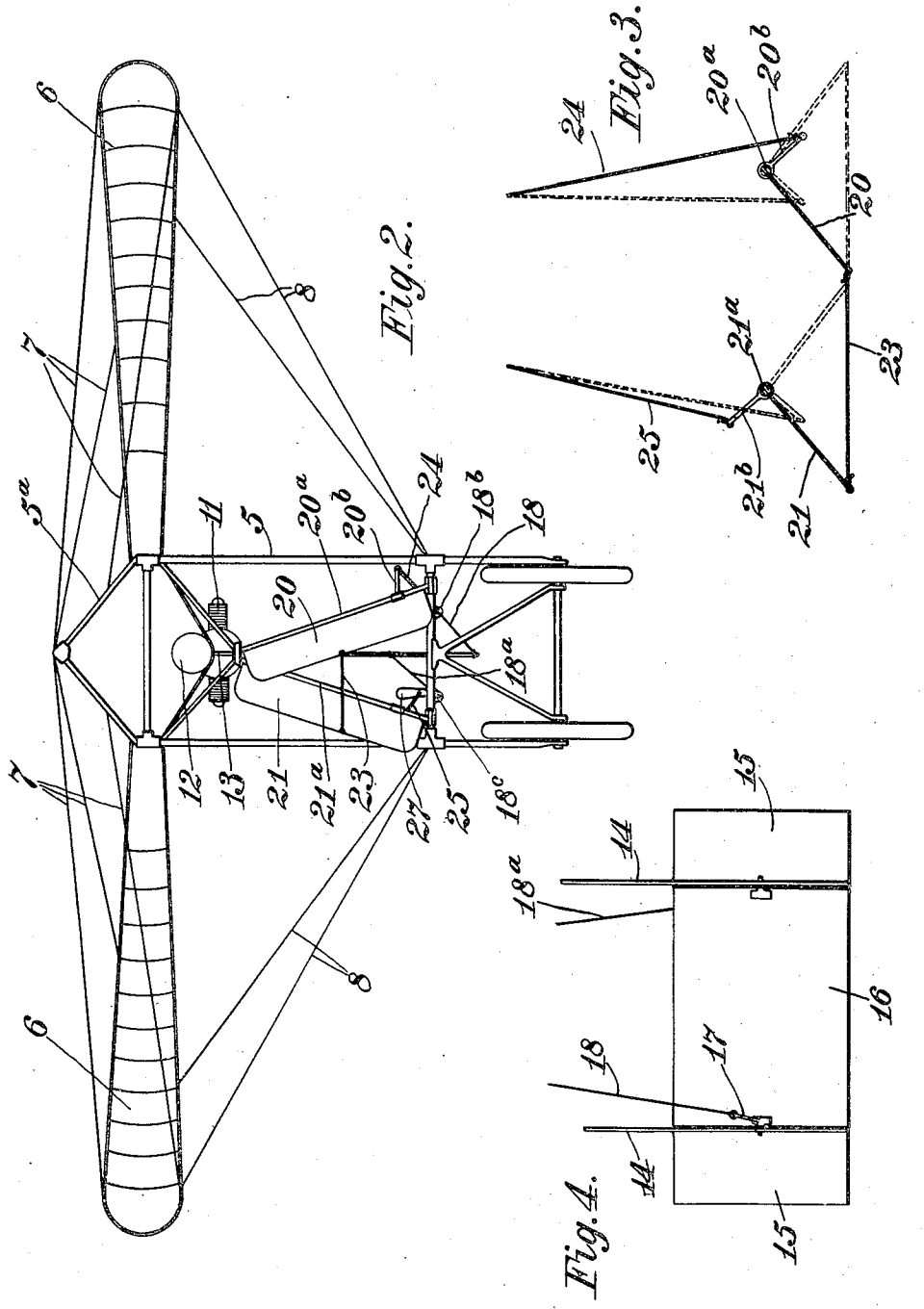

Witnesses
Benjamin Finckel
Mayne Foard

Inventor
John C. Doty
by Finckel & Finckel
his Attorneys

UNITED STATES PATENT OFFICE.

JOHN C. DOTY, OF MOUNT VERNON, OHIO.

FLYING-MACHINE.

1,023,927. Specification of Letters Patent. Patented Apr. 23, 1912.

Application filed May 22, 1911. Serial No. 628,610.

To all whom it may concern:

Be it known that I, JOHN C. DOTY, a citizen of the United States, residing at Mount Vernon, in the county of Knox and State of Ohio, have invented a certain new and useful Improvement in Flying-Machines, of which the following is a specification.

This invention relates more particularly to the type of flying machine known as "heavier than air machine" and are driven by power and have their elevation and direction of motion controlled by planes.

The principal object of the invention is to furnish an improved construction in which means are provided for facilitating the turning or steering of the machine around curves said means incidentally being useful in counteracting tilting effects of wind striking the machine abeam or at the side.

Another object of the invention is by its general construction and arrangement of parts to secure a better balancing of the machine.

A further object is to provide an improved rudder for directing the machine upward or downward.

The features of the invention are embodied in the construction herein shown and described and then pointed out in the appended claims.

In the accompanying drawings Figure 1 is a view in side elevation. Fig. 2 is a view in front elevation. Fig. 3 is a horizontal sectional diagrammatic view to illustrate the upright steering planes. Fig. 4 is a top plan view of the rudder.

The forward or main frame 5 is an open work rectangular structure having a hip-like frame 5^a surmounting it at the top. The large main stationary planes 6, 6, are extended laterally from the sides of the top of the main frame and are braced by cords or wires 7 extending to the hip-like frame and by wires 8 extending to the base of the main frame.

9 designates an ordinary propeller wheel having secured to it a shaft 10 that is suitably journaled in the central upper portion of the main frame. The shaft of the propeller is driven by a suitable motor indicated at 11 supplied with fuel from a tank 12 through a pipe 13. The motor and tank are also located in the upper portion of the main frame. The main frame has a rearwardly extending open work frame or bracket 14 in a general way of wedge form. Mounted at the rear end of this frame 14 is a pair of stationary horizontal planes 15, 15 between which is pivoted a movable plane 16. The movable plane 16 has extended above and below its axis arms 17 and 17^a to the ends of which cords or wires 18 and 18^a respectively are attached and extended forward to a hand lever 19 pivoted in the lower portion of the main frame. The cords 18 and 18^a are passed through eyes at 18^b and 18^c connected to the hand lever at opposite sides of its fulcrum so that by moving the lever backward or forward the movable rudder plane 16 can be tilted to present its upper or lower side at an incline to the air as the machine moves through it and therefore to guide the machine downward or upward as may be desired.

Pivoted at the rear portion of the main frame and near the line of the propeller shaft 10 are the upper ends of upright but inclined shafts 20^a and 21^a to which are secured the forward edges of two planes 20 and 21. The lower ends of the shafts 20^a and 21^a are stepped in suitable bearings near the sides of the lower portion of the main frame. The rear edges of the planes 20 and 21 are connected by a stiff rod or link 23 so that the two planes may move on their axes in unison. The shafts 20^a and 21^a have secured to them crank arms 20^b and 21^b respectively projecting in opposite directions and to which are attached wires or cords 24 and 25 extending forward to foot levers 26 and 27 so that by pressure of the foot upon one or the other of said foot levers the planes 20 and 21 can be rocked in unison and held to stand in the necessary direction. In Fig. 3 is illustrated in full and broken lines only two of the possible positions of the two planes 20 and 21.

Extending below the frames 5 and 14 are frames 28 and 29 respectively to receive running or ground wheels 30 and 31 upon which the machine is started and upon which it alights after a flight. 32 designates the operator's seat which is so placed that he can control the hand and foot levers.

From the foregoing description taken in connection with the drawing it will be observed that by far the larger portion of the weight of the machine is concentrated in central position below the large main planes thereby so locating the center of gravity of the machine as a whole at a point where it is

difficult to overturn it. It will also be observed that the two planes 20 and 21 resemble somewhat the blades of an ordinary wind mill and that the upper ends of the shafts of these planes lie in approximately the horizontal axis of the machine as a whole. The tendency of air pressure in flight upon those blades when they are held to stand at an inclination to the direction of motion of the machine is principally two fold, towit; first it is rotative thereby causing the machine as a whole to tilt and second, it steers the machine from a straight course in a horizontal direction. With machines of this kind at present in use it is convenient if not necessary in turning a curve for the operator to tilt the machine by leaning toward or throwing his weight toward the side of the machine to be depressed. With the planes 20 and 21 this effect is secured merely by shifting them toward the side to be depressed. In driving the machine in a straight direction the blades 20 and 21 are held or left to stand fore and aft. Side gusts tend to lift the windward side of the machine and by turning the planes 20 and 21 toward that side this lifting effect can be counteracted and the machine held in practically horizontal position.

The machine is started upon a flight in the manner usual with present day machines of this kind. The rudder plane 16 is sufficiently elevated at its forward portion until the satisfactory altitude is attained and then depressed and held in that position necessary to maintain level desired. Changes in elevation are effected by correspondingly shifting the rudder. The exact angles or positions therefore of the operated planes varies during flight and is regulated largely by the speed of the machine and the wind pressures. In rapid motion the angles would not be so great as in slow.

What I claim is:

1. In a flying machine of the aeroplane type, the combination with the frame, of a pair of swinging upright steering and balancing planes supported on axes inclined upwardly toward each other and meeting at approximately a common point and means for oscillating said planes on their axes in unison.

2. In a flying machine of the aeroplane type, the combination with the frame of a pair of swinging upright steering and balancing planes supported at their forward edges on axes inclined upwardly toward each other, the forward edges of said planes and the said axes meeting at approximately a common point.

3. In a flying machine of the aeroplane type, the combination with the main frame of a pair of swinging upright steering and balancing planes supported on upright axes inclined upwardly toward each other and meeting at their upper ends in approximately the normal horizontal axis of the machine.

JOHN C. DOTY.

Witnesses:
BENJAMIN FINCKEL,
MAYME FOARD.